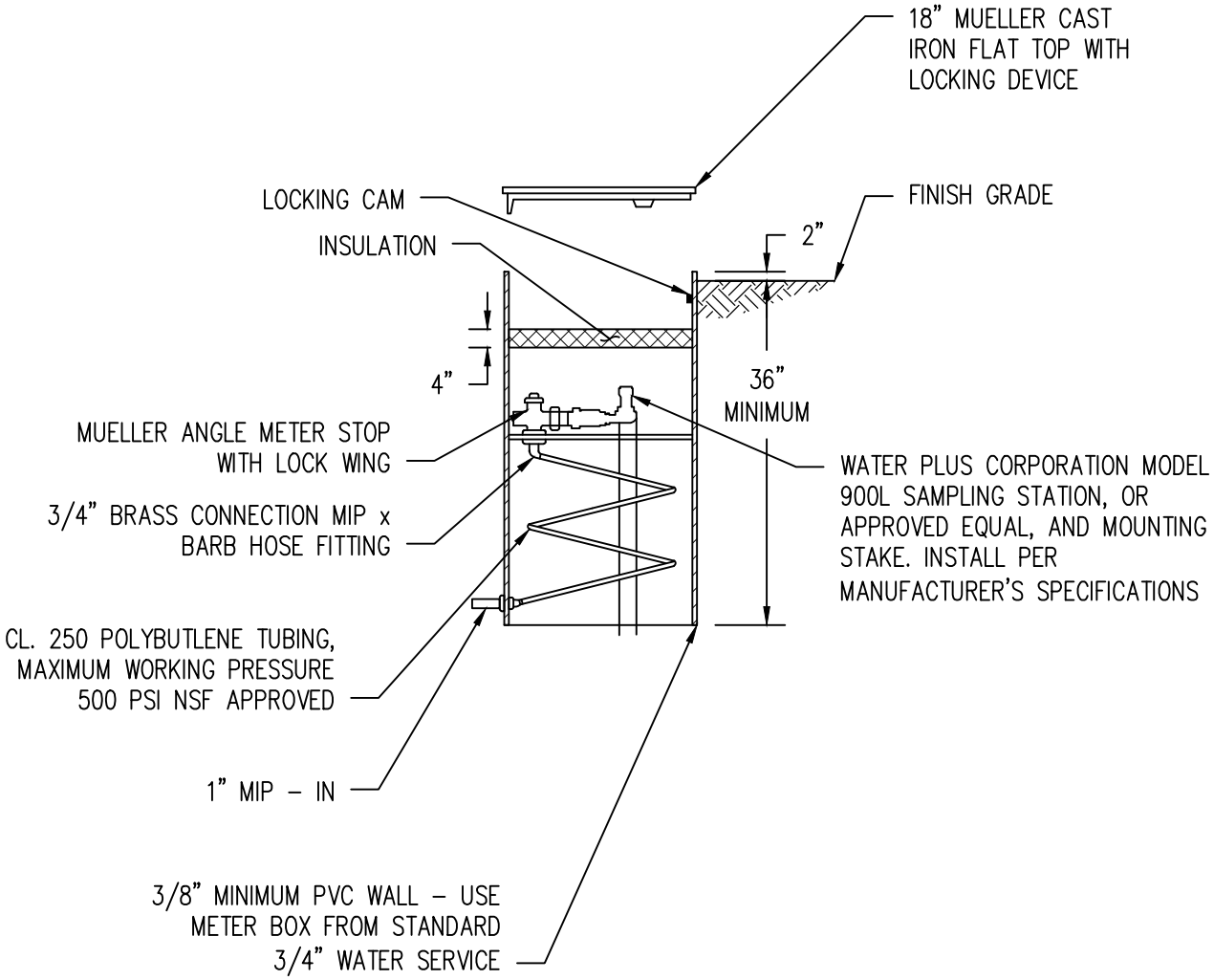

NOTES:

1. MOUNTING PLATFORM FOR SAMPLING STATION NOT SHOWN FOR CLARITY.
2. INSTALL PER MANUFACTURER'S SPECIFICATIONS.
3. SAMPLE PORT BOX SHALL BE INSTALLED BEHIND AND WITHIN 1' FROM PROPERTY LINE AND INSIDE PUBLIC USE EASEMENT, OR AS OTHERWISE DIRECTED BY ENGINEER.
4. SAMPLE PORT BOX SHALL NOT BE LOCATED IN THE SIDEWALK.

DATE	REVISIONS

WASHOE COUNTY, NEVADA 1861

STANDARD DETAILS FOR PUBLIC WORKS CONSTRUCTION

SAMPLE PORT IN METER BOX

SECTION NUMBER: **300**

DRAWING NUMBER: **W-328**

DATE: **2/21/2022**