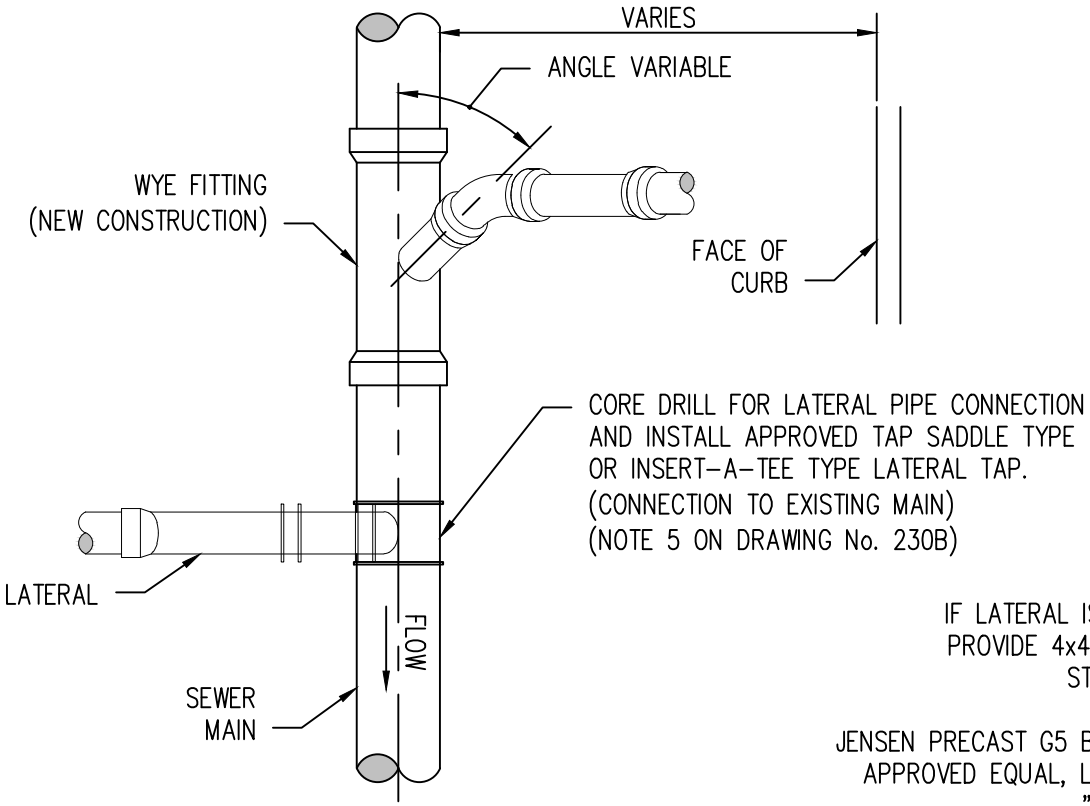

PLAN

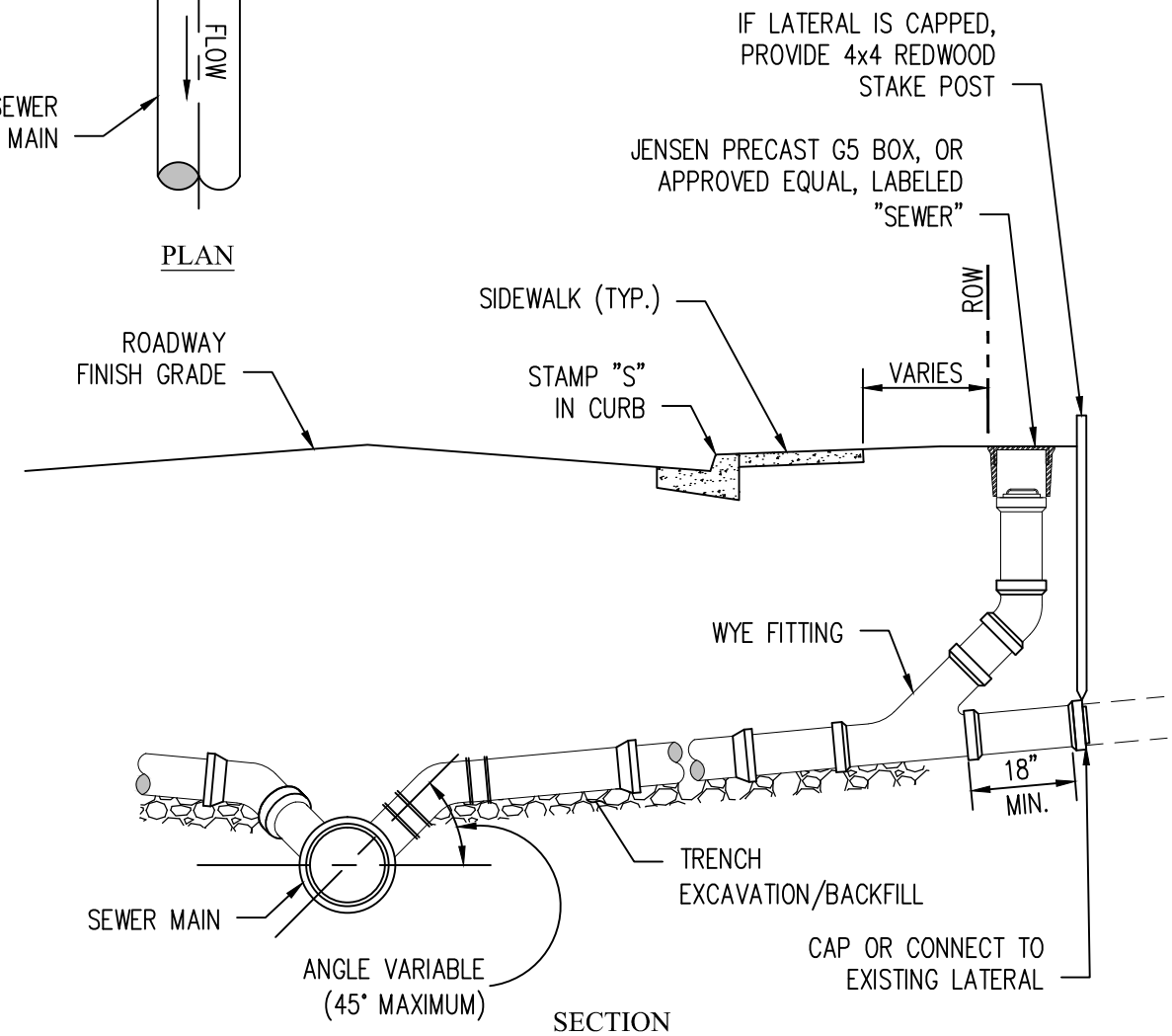

SECTION

DATE	REVISIONS

WASHOE COUNTY, NEVADA 1861

STANDARD DETAILS FOR PUBLIC WORKS CONSTRUCTION

SANITARY SEWER LATERAL

SECTION NUMBER: 200

DRAWING NUMBER: W-230A

DATE: 2/21/2022