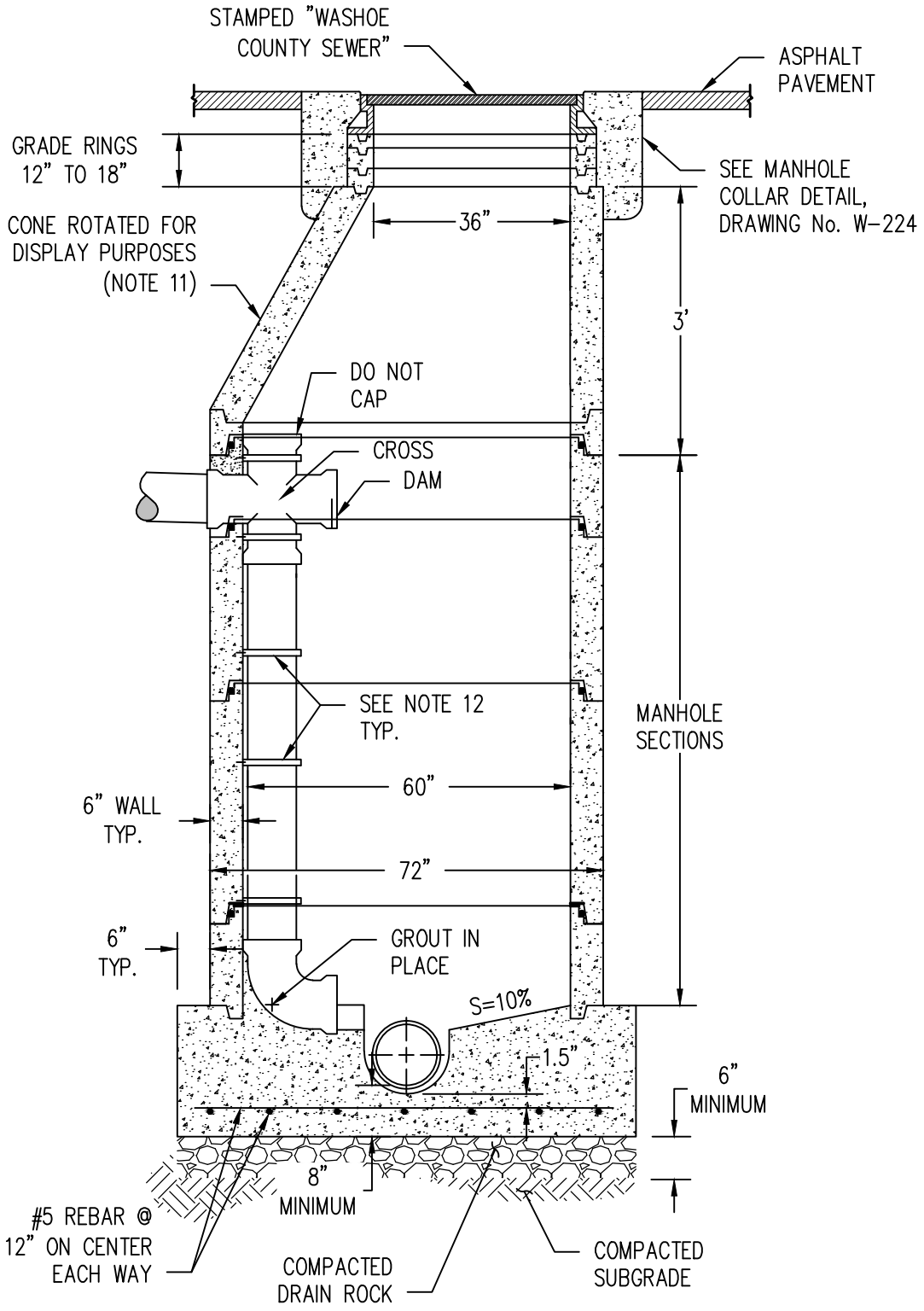

DATE	REVISIONS

STANDARD DETAILS FOR PUBLIC WORKS CONSTRUCTION

MANHOLE TYPE 3A

SECTION NUMBER: 200

DRAWING NUMBER: W-221A

DATE: 2/21/2022