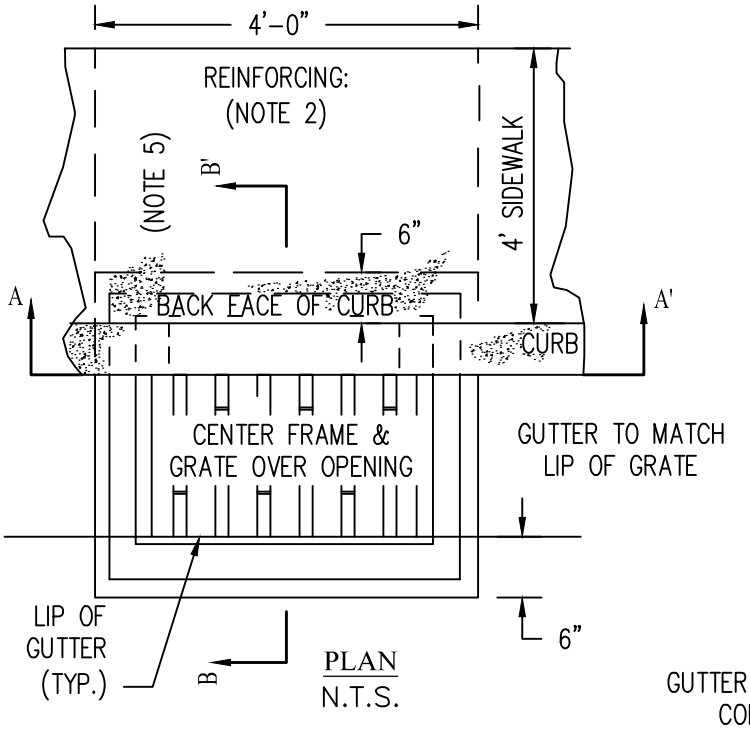

PLAN
N.T.S.

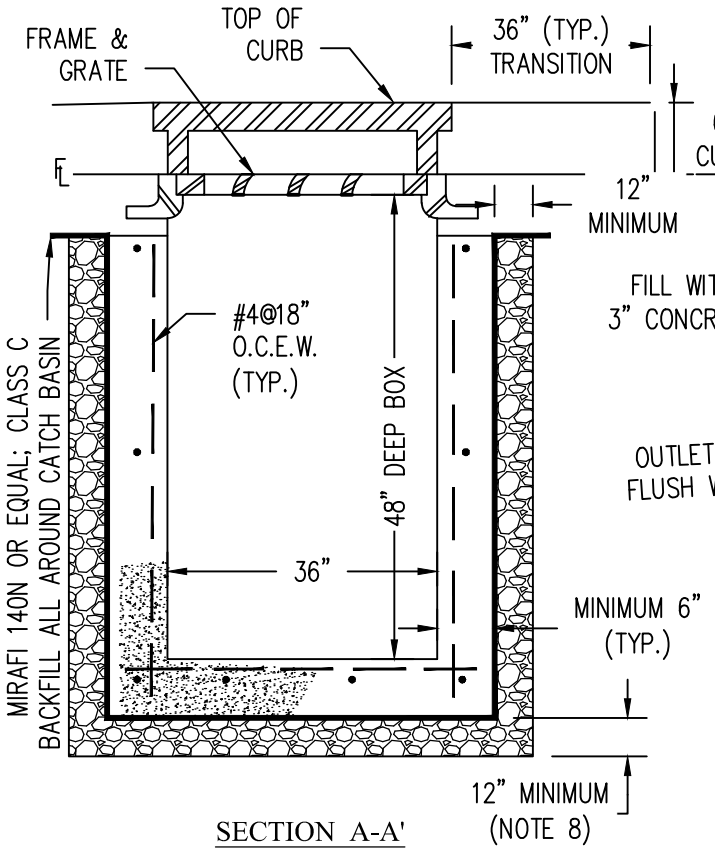

SECTION A-A'
N.T.S.

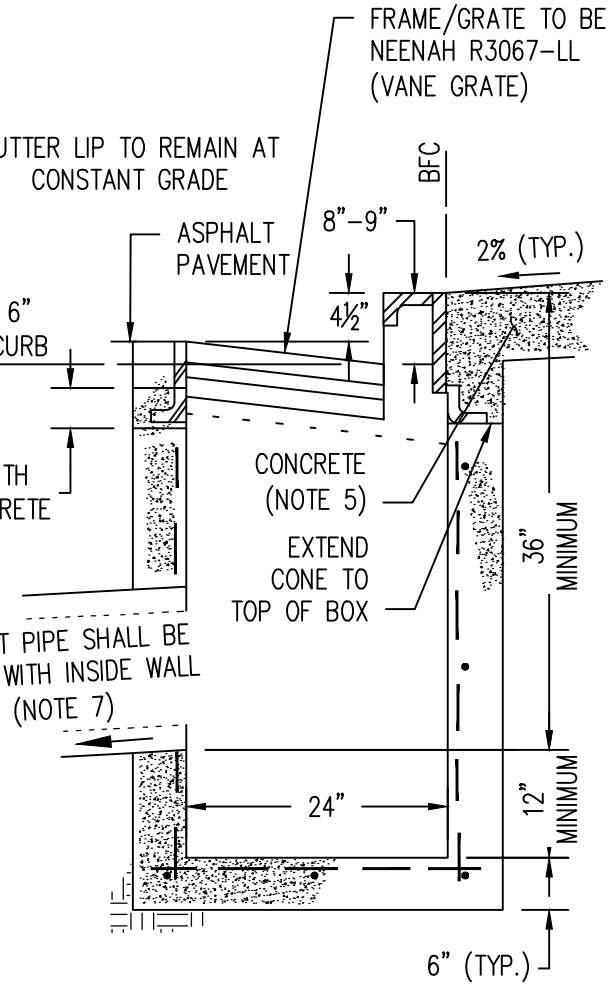

SECTION B-B'
N.T.S
(SEE DETAIL, DRAWING No. W-212C)

DATE	REVISIONS

STANDARD DETAILS FOR PUBLIC WORKS CONSTRUCTION

CATCH BASIN TYPE 4R

SECTION NUMBER: 200

DRAWING NUMBER: W-212A

DATE: 2/21/2022