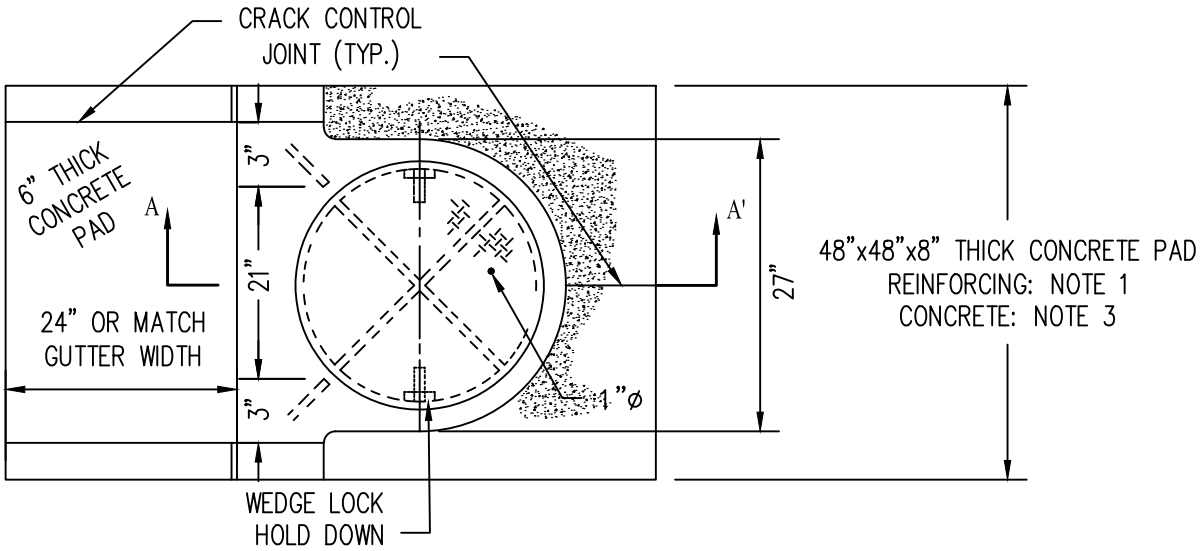

PINKERTON A-434 FRAME & COVER, OR EQUAL
N.T.S.

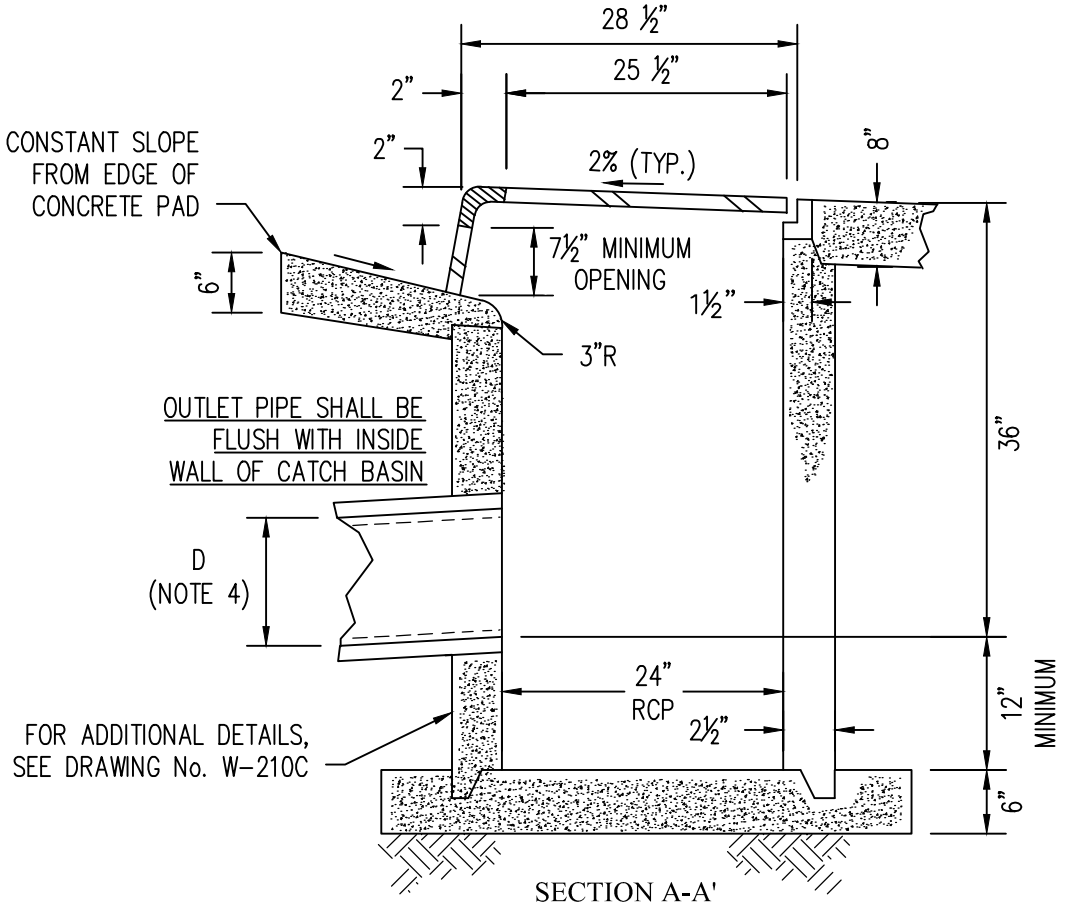

SECTION A-A'
N.T.S.

DATE	REVISIONS

WASHOE COUNTY, NEVADA 1861

STANDARD DETAILS FOR PUBLIC WORKS CONSTRUCTION

CATCH BASIN TYPE 1

SECTION NUMBER: 200

DRAWING NUMBER: W-210A

DATE: 2/21/2022