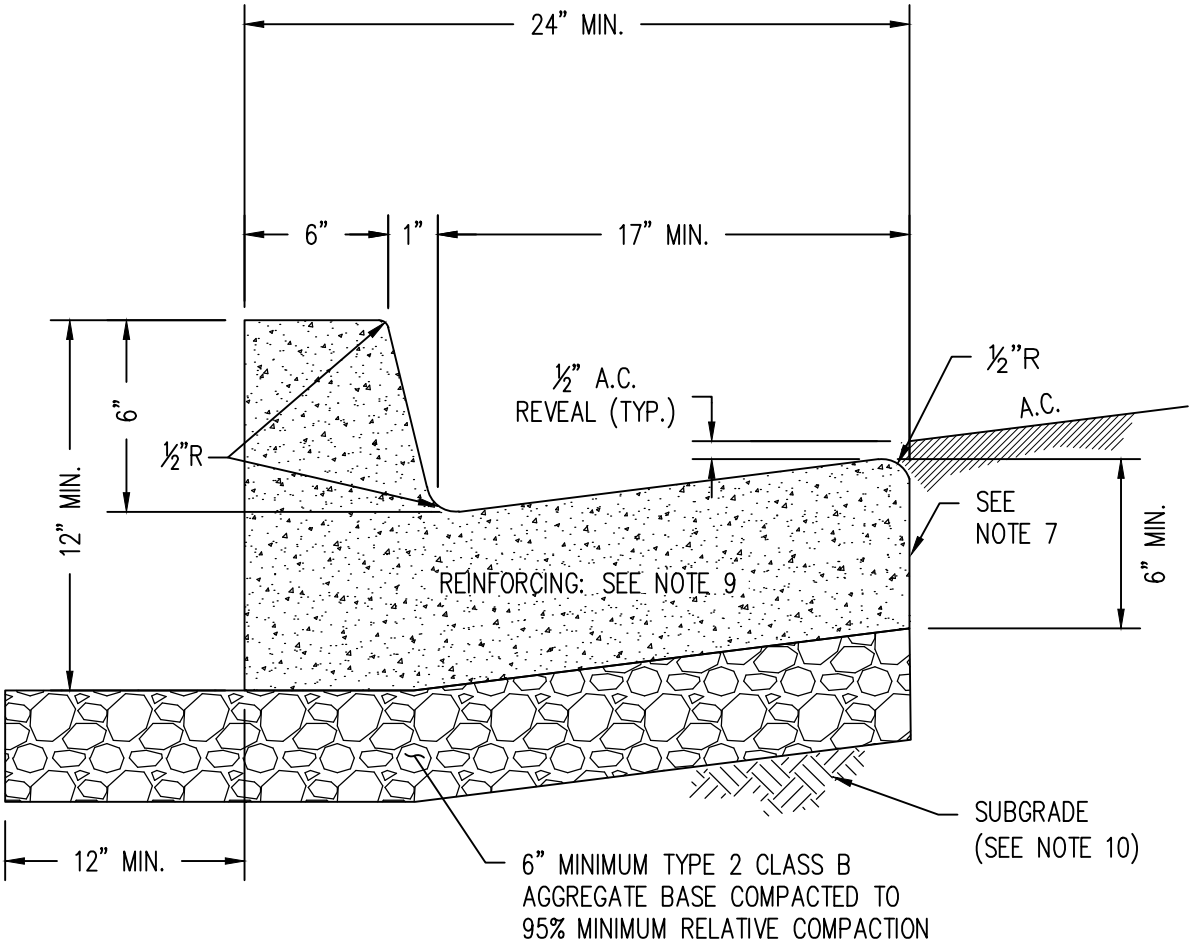

SECTION
N.T.S.

DATE	REVISIONS

STANDARD DETAILS FOR PUBLIC WORKS CONSTRUCTION

TYPE 1 P.C.C. CURB & GUTTER

SECTION NUMBER: 100

DRAWING NUMBER: W-131A

DATE: 2/21/2022