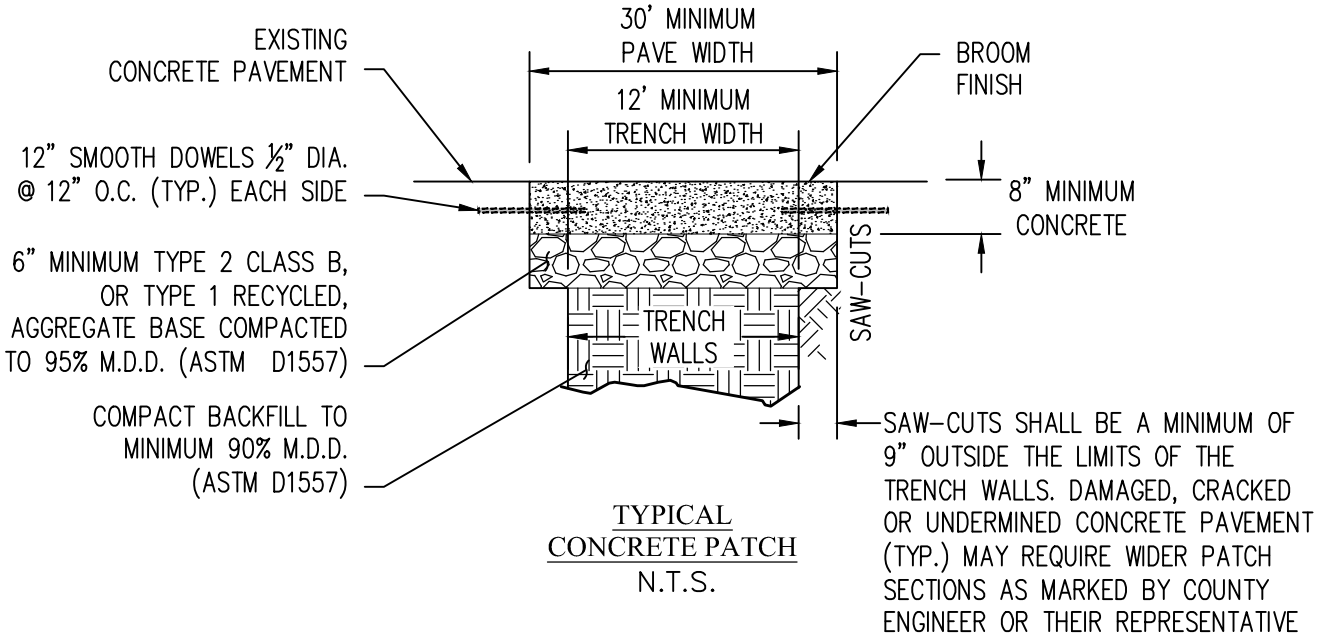

TYPICAL
CONCRETE PATCH
N.T.S.

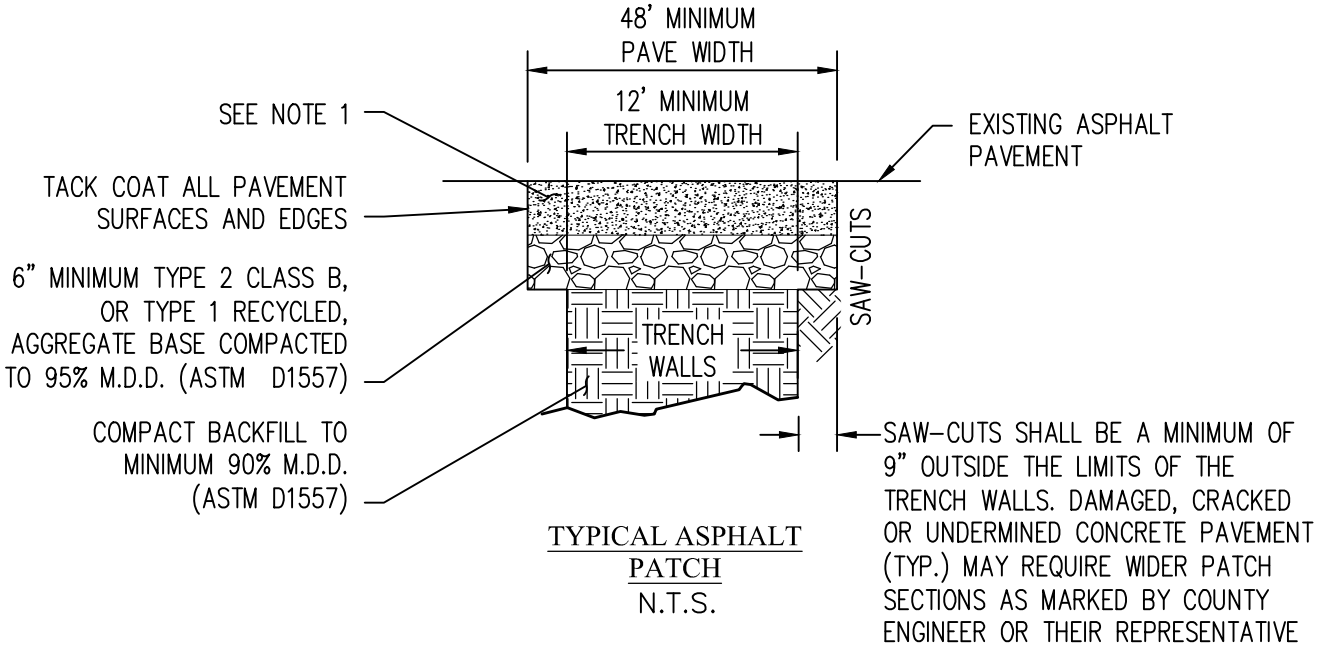

TYPICAL ASPHALT
PATCH
N.T.S.

DATE	REVISIONS

STANDARD DETAILS FOR PUBLIC WORKS CONSTRUCTION

PERMANENT PAVEMENT PATCH

SECTION NUMBER: 100

DRAWING NUMBER: W-121A

DATE: 2/21/2022